Power Factor Controller RVC
Quick start

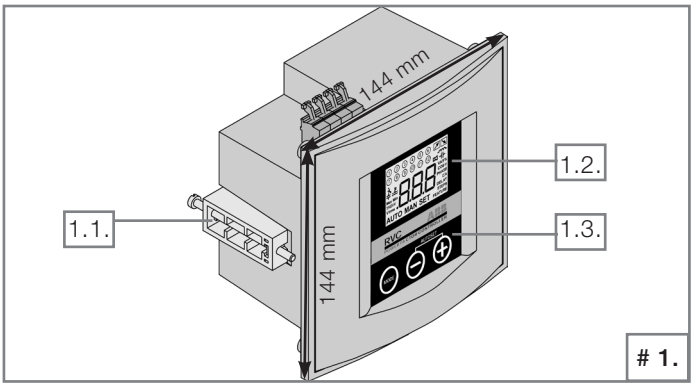

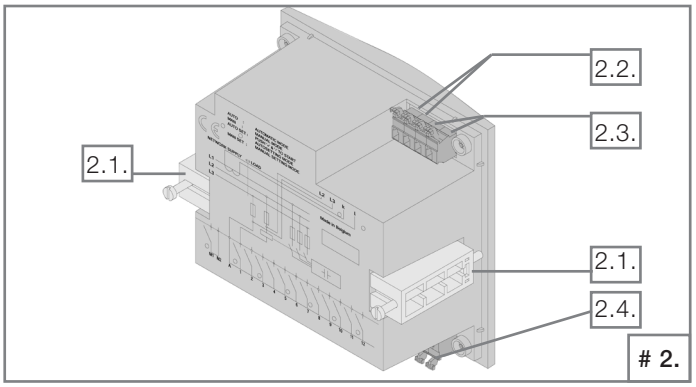

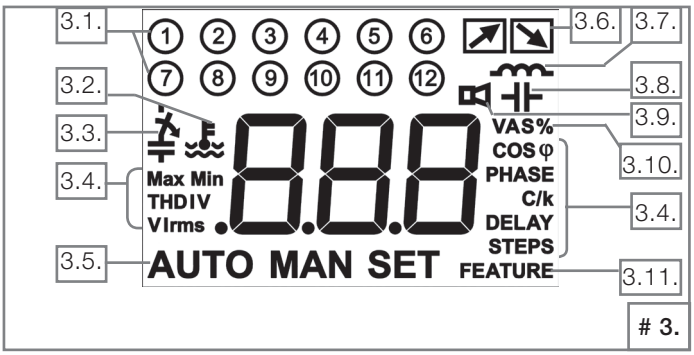

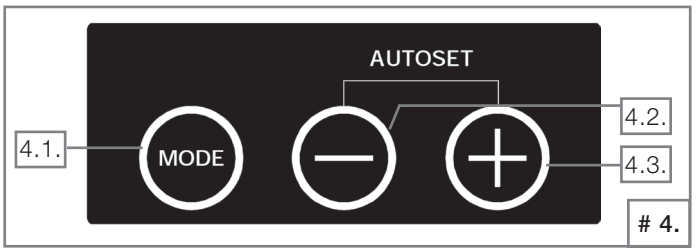

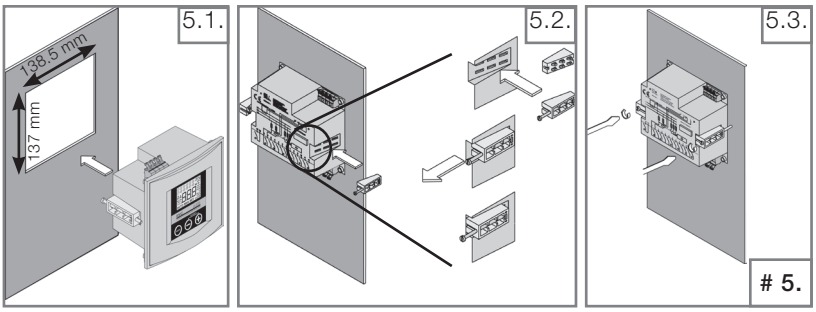

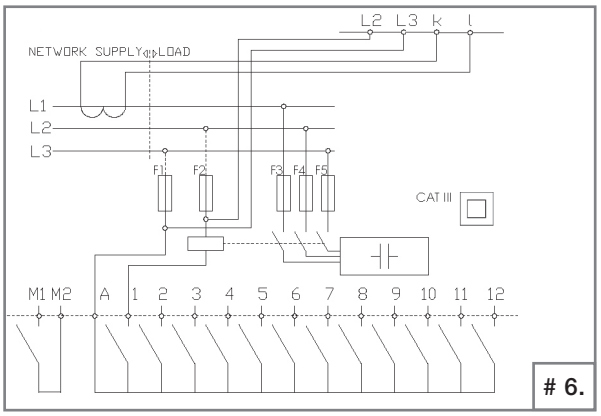

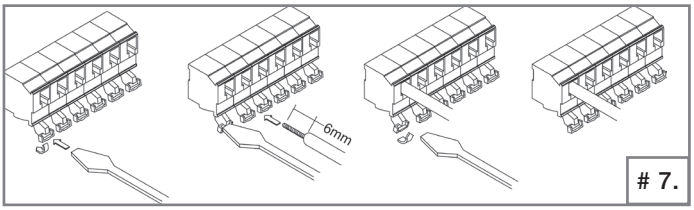

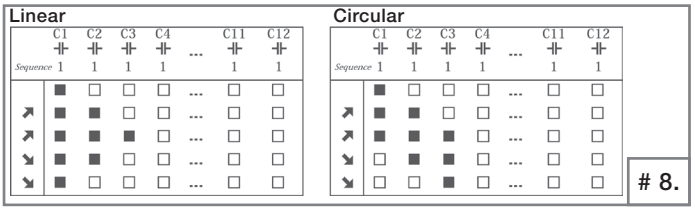

3-Phase

$$C/k = \frac{2}{3} \times \frac{Q \times 1000}{\sqrt{3} \times U \times k}$$

1-Phase

$$C/k = \frac{2}{3} \times \frac{Q \times 1000}{U \times k}$$

C/k: 3-Ph/400V

CT Ratio		K	Capacitor step rating (kvar)											
			5	10	15	20	30	40	50	60	70	90	100	120
10/1	50/5	10	0.48	0.97	1.45	1.93	2.90	3.87	4.84					
20/1	100/5	20	0.24	0.48	0.73	0.97	1.45	1.93	2.42	2.90	3.38	4.35	4.84	
30/1	150/5	30	0.16	0.32	0.48	0.64	0.97	1.29	1.61	1.93	2.26	2.90	3.22	3.87
40/1	200/5	40	0.12	0.24	0.36	0.48	0.73	0.97	1.21	1.45	1.69	2.18	2.42	2.90
60/1	300/5	60	0.08	0.16	0.24	0.32	0.48	0.64	0.81	0.97	1.13	1.45	1.61	1.93
80/1	400/5	80	0.06	0.12	0.12	0.24	0.36	0.48	0.60	0.73	0.85	1.09	1.21	1.45
100/1	500/5	100	0.05	0.10	0.15	0.19	0.29	0.39	0.48	0.58	0.68	0.87	0.97	1.16
120/1	600/5	120	0.04	0.08	0.12	0.16	0.24	0.32	0.40	0.48	0.56	0.73	0.81	0.97
160/1	800/5	160	0.03	0.06	0.09	0.12	0.18	0.24	0.30	0.36	0.42	0.54	0.60	0.73
200/1	1000/5	200	0.02	0.05	0.07	0.10	0.15	0.19	0.24	0.29	0.34	0.44	0.48	0.58
300/1	1500/5	300	0.02	0.03	0.05	0.06	0.10	0.13	0.16	0.19	0.23	0.29	0.30	0.39
400/1	2000/5	400	0.01	0.02	0.04	0.05	0.07	0.10	0.12	0.15	0.17	0.22	0.23	0.29
600/1	3000/5	600	0.01	0.02	0.02	0.03	0.05	0.06	0.08	0.10	0.11	0.15	0.15	0.19

9.

Power and productivity
for a better world™

10.1. AUTO

0.82 cos φ AUTO → 415 V rms AUTO → 293 A Irms AUTO → 1.2 % THD V AUTO → 5.6 % THD I AUTO

10.2. MAN

0.95 cos φ MAN → 0.95 cos φ MAN → 0.95 cos φ MAN → 0.95 cos φ MAN → 0.95 cos φ MAN

10.3. AUTO SET

Au AUTO SET PHASE C/k DELAY STEPS → Au AUTO SET PHASE C/k DELAY → Au AUTO SET DELAY STEPS → AUTOSET → Au AUTO SET DELAY STEPS

10.4. MAN SET

1.00 cos φ MAN SET → 90 PHASE MAN SET → .010 C/k MAN SET → 40 s DELAY MAN SET → 1.1.1 STEPS MAN SET

1.1.1 STEPS MAN SET → 1.1.1 STEPS MAN SET → ... ... → 3.3.4 STEPS MAN SET → 3.3.4 STEPS MAN SET

FEATURE

Cir MAN SET FEATURE → Lin MAN SET FEATURE

di S cos φ MAN SET FEATURE → -.70 cos φ MAN SET FEATURE

PROTECTION

Max V rms di S MAN SET → Max V rms 470 V MAN SET

Min V rms di S MAN SET → Min V rms 330 V MAN SET

Max THD V di S MAN SET → Max THD V 8 % MAN SET

10.

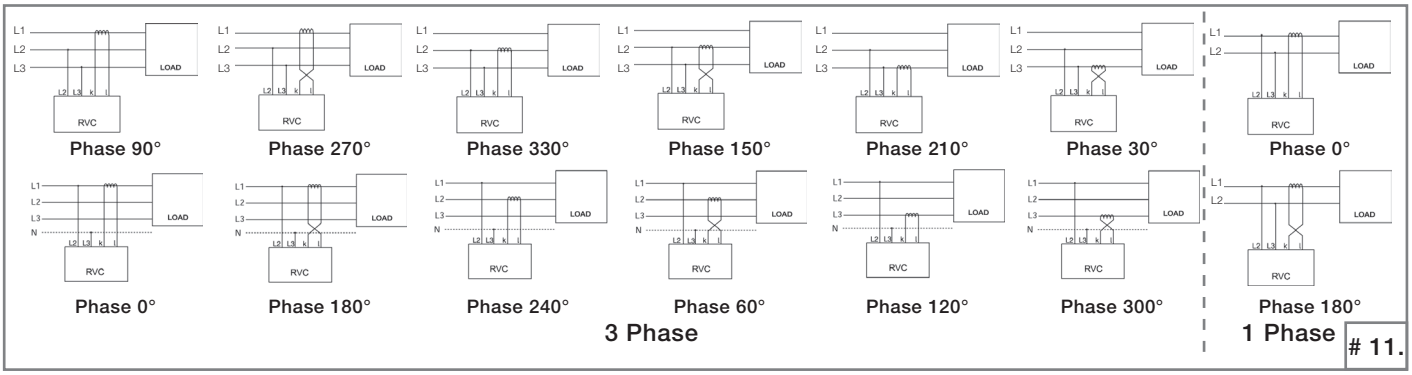

11.

© Copyright 2013 ABB - 2GCS201087A0050 1/2 - January 2013